For wood, concrete and steel attachment see Roof Anchorage Detail, Form No. CB-62.

Welded Isolation springs housingare standard. For bolted spring housing, neoprene pads and spring cups see Weldment and Bolting Detail, Form No. CB-61

STRUCTURALY CALCULATED VIBRATION ISOLATION ROOF CURB FOR DIRECT FIT (SUN CORE) LARGE CABINET UNITS

ZX08-14; XX08-12; XYA7, ZYA7
ZY07-12; XY07-09; ZL08-14

PROVENT P/N	A	B	EST. WEIGHT
CBISCPRL18**	8"	18"	380 Lbs.
CBISCPRL21**	11"	21"	405 Lbs.
CBISCPRL24**	14"	24"	425 Lbs.

**Note: Spring configuration must be added to part number at time of order

Weight of upper portion supported by spring isolators= 221 Lbs.

Meets seismic requirements for the following codes:
CBC 2022
IBC 2021

FEATURES

- Roof curbs sides and ends are 14 ga.
- Fully welded construction.
- Gasketing package provided.
- Heat treated wood nailer provided.
- insulated deck pans provided.
- Pitched curbs and taller curbs are available.
- CalDyn OSHPd pre-approved seismic restraints. (OPM-0401-13), (CQA).

NOTES

- Attach ductwork to roof curb. Flanges of duct rest on top of the curb, Support ductwork below the curb.
- Thru the curb utillities are available. Contact you York distributor or Provent directly.

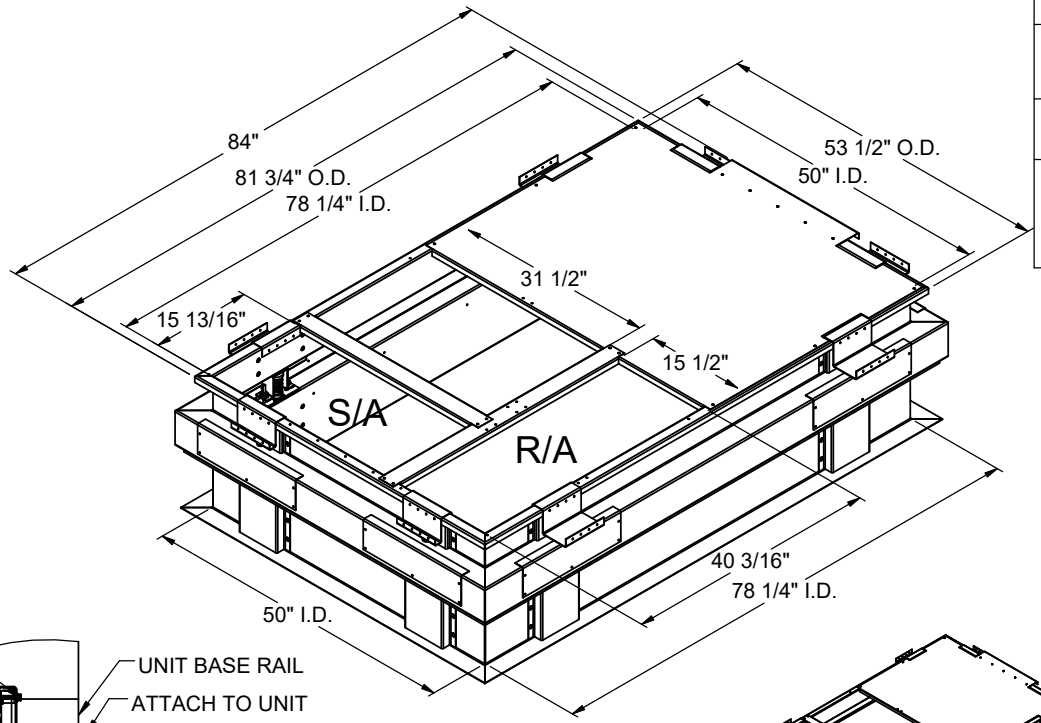

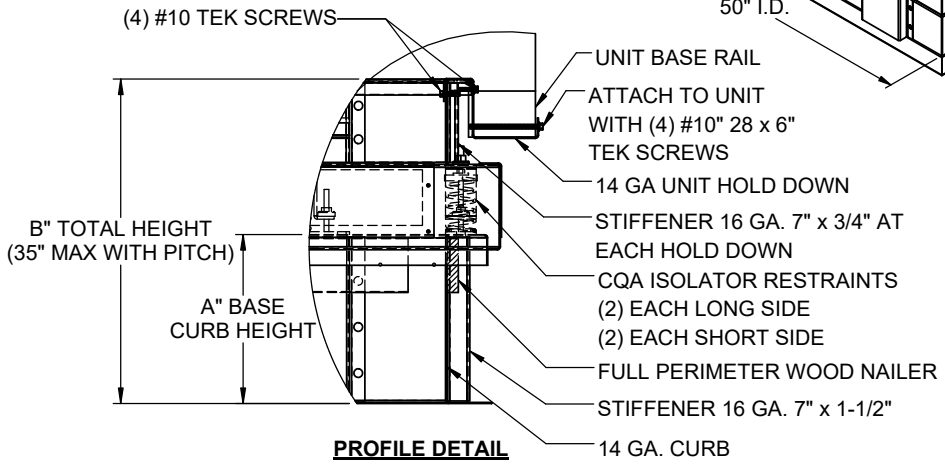

PROFILE DETAIL

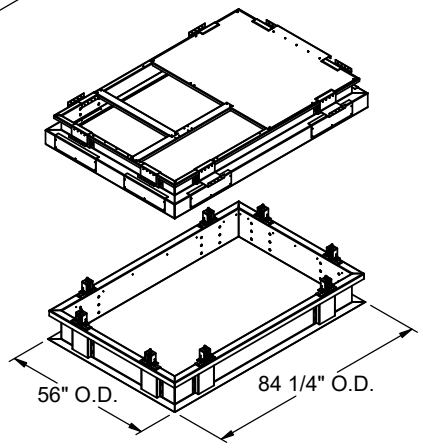

ProVent

3847 WABASH DRIVE
MIRA LOMA, CA 91752

PHONE (951) 685-1101
FAX (619) 872-9799

SUBMITED TO: _____
COMPANY: _____
JOB NAME: _____
EQUIPMENT: _____
NOTES: _____

FORM NO:	PART NUMBER:	
CBISC-06	-	
DATE:	REV:	DRAWN BY:
7/28/2023	5	JG